VC-B20U

HD Camera

(PTZ Video Camera)

Installation Guide - English

[Important]

To download the latest version of Quick Start Guide, multilingual user manual, software, or driver, etc., please visit Lumens
http://www.MyLumens.com

Table of Contents

Copyright Information **2**

Chapter 1 Safety Instructions **3**

KCC Warning 5

Chapter 2 Package Contents **6**

Chapter 3 Product Overview **7**

3.1 Overview 7

3.2 Description of LED indicator 8

3.3 System Requirements 8

Chapter 4 Instruction for Installation **9**

4.1 Preparation Before Installation 9

4.2 Instruction for installation 9

4.3 Connecting the device 12

Chapter 5 Setting Menu Description **14**

5.1 Functions of remote control 14

Chapter 6 Descriptions of Major Functions **15**

6.1 I would like to save the current lens position data 15

6.2 I would like to clear the saved position data 15

6.3 I would like to turn on the back light compensation function 15

6.4 I would like to adjust the shooting angle of the lens 15

6.5 I would like to zoom in/out images 16

6.6 I would like to adjust the focal length 16

Chapter 7 DIP Switch Setting **17**

7.1 DIP SWITCH 17

Chapter 8 Troubleshooting **18**

Appendix 1 Supported Resolutions **20**

Copyright Information

Copyrights © Lumens Digital Optics Inc. All rights reserved.

Lumens is a trademark that is currently being registered by Lumens Digital Optics Inc.

Copying, reproducing or transmitting this file is not allowed if a license is not provided by Lumens Digital Optics Inc. unless copying this file is for the purpose of backup after purchasing this product.

In order to keep improving the product, Lumens Digital Optics Inc. hereby reserves the right to make changes to product specifications without prior notice. The information in this file is subject to change without prior notice.

To fully explain or describe how this product should be used, this manual may refer to names of other products or companies without any intention of infringement.

Disclaimer of warranties: Lumens Digital Optics Inc. is neither responsible for any possible technological, editorial errors or omissions, nor responsible for any incidental or related damages arising from providing this file, using, or operating this product.

Chapter 1 Safety Instructions

Please use the product following the safety instructions below:

1 Operation

1.1 Please use the product in the recommended operating environment.

1.2 Do not place the product in tilted position.

1.3 Do not place the product on an unstable trolley, stand or table.

1.4 Do not use this product near water or source of heat.

1.5 Use attachments only as recommended.

1.6 Use the type of power source indicated on this product. If you are not sure of the type of power available, consult your dealer or local electricity company for advice.

1.7 Always take the following precautions when handling the plug. Failure to do so may result in sparks or fire:

- Ensure the plug is free of dust before inserting it into a socket.
- Ensure that the plug is inserted into the socket securely.

1.8 Do not overload wall sockets, extension cords or multi-way plug boards to avoid potential risks.

1.9 Do not block slots and openings in the case of this product as poor ventilation may lead to overheating of this product.

1.10 Except as specifically instructed in this User Manual, do not attempt to open or remove covers by yourself. It may expose you to electric shock or other hazards. Refer all servicing to licensed service personnel.

1.11 Unplug this product from the outlet and refer servicing to licensed service personnel when the following situations happen:

- If the power cords are damaged or frayed.
- If liquid is spilled into the product or the product has been exposed to rain or water.

2 Installation

2.1 For security considerations, please make sure the standard hanging rack you bought is in line with UL or CE safety approbations and installed by technician personnel approved by agents.

3 Storage

3.1 Do not place the Product where the cord can be stepped on as this may result in fraying or damage to the lead or the plug.

3.2 Never push objects of any kind through cabinet slots. Never allow liquid of any kind to spill into the Product.

3.3 Unplug this product during thunderstorms or if it is not going to be used for an extended period.

3.4 Do not place this product or accessories on top of vibrating equipment or heated objects.

4 Cleaning

4.1 Unplug all the cables before cleaning. Use a damp cloth for cleaning. Do not use liquid or aerosol cleaners.

5 Remote control (if the accessories are equipped with remote control)

5.1 Using an incorrect battery type in the remote control may result in breakdown. Follow local instructions on how to dispose of used batteries.

■ Precautions

Warning: To reduce the risk of fire or electric shock, do not expose this appliance to rain or moisture.

If HD Camera will not be used for an extended time, unplug it from the power socket.

	Note Risk of Electric Shock Please do not open it by yourself		
Caution: To reduce the risk of electric shock, do not remove cover (or back). No user-serviceable parts inside. Refer servicing to licensed service personnel.			
	This symbol indicates that this equipment may contain dangerous voltage which could cause electric shock.		This symbol indicates that there are important operating and maintenance instructions in this User Manual with this unit.

■ FCC Warning

This HD Camera has been tested and found to comply with the limits for a Class A digital device, pursuant to Article 15-J of FCC Rules. These limits are designed to provide reasonable protection against harmful interference in a commercial installation.

This digital apparatus does not exceed the Class A limits for radio noise emissions from digital apparatus as set out in the interference-causing equipment standard entitled "Digital Apparatus," ICES-003 of Industry Canada.

Cet appareil numerique respecte les limites de bruits radioelectriques applicables aux appareils numeriques de Classe A prescrites dans la norme sur le material brouilleur: "Appareils Numeriques," NMB-003 edictee par l'Industrie.

■ EN55022 (CE Radiation) Warning

This product is intended for use in a commercial, industrial, or educational environment. It is not intended for residential use.

This is a Class A product. In a residential environment it may cause radio interference, in which case the user may be required to take adequate measures. The typical use is in a conference room, reception room or hall.

■ KCC Warning

A 급 기기 (업무용 방송통신기자재)	이 기기는 업무용(A 급) 전자파적합기기로서 판매자 또는 사용자는 이 점을 주의하시기 바라며, 가정 외의 지역에서 사용하는 것을 목적으로 합니다.

Chapter 2 Package Contents

VC-B20U	Instruction for installation	Remote Control
Power Cord	Power Adapter	USB cable (USB 3.0)
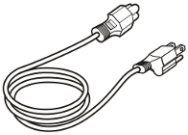 Appearance may vary depending on country/region	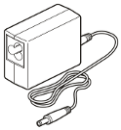	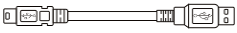

Chapter 3 Product Overview

3.1 Overview

Front View

Back View

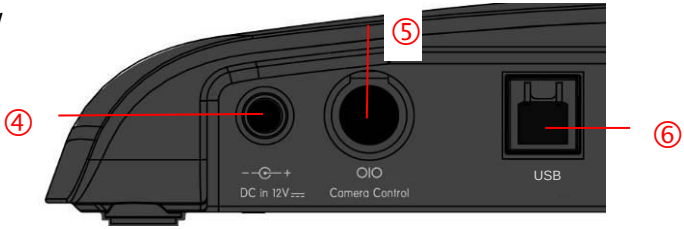

1. Camera lens	2. Power LED indicator
3. Standby LED indicator	4. Power input
5. Camera Control (RS232 IN)	6. USB 3.0 Connector

3.2 Description of LED indicator

3.2.1 Power：

3.2.1.1 No light: Power off

3.2.1.2 Orange light: In standby mode

3.2.1.3 Green light: In use

3.2.2 Standby:

3.2.2.1 No light: Power on

3.2.2.2 Orange light: Startup in progress or in standby mode; USB not connected

3.2.2.3 Green light: In standby mode, to connect USB

3.2.2.4 Flickering orange: Power off in progress

3.3 System Requirements

1. Windows System: Windows 7 or above
2. Chrome system
3. MAC System: Mac OS X 10.8 or above

<Remark> When connecting to MAC, please refer to **Chapter 7 DIP Switch Setting**, to modify DIP Switch

Chapter 4 Instruction for Installation

4.1 Preparation Before Installation

Installation and connection of HD camera requires special skills. To install by yourself, please follow necessary steps, ensure steady and tight installation of the device, and pay attention to your safety to avoid any accident.

4.1.1 Ensure the safety of the installation environment. Please do not install the device on unstable ceiling or in a place where the device is in danger of falling to avoid any accident.

4.1.2 Please check whether accessories in the box are complete or not. Please contact the supplier for any shortage, and make sure to keep the accessories in the box intact.

4.1.3 Please choose a proper place for installation of camera in advance. Please determine an installation place according to the following requirements.

4.1.1.1 Confirm the position for the object to be captured.

4.1.1.2 Confirm whether the camera is set at a proper distance from other light sources.

4.2 Instruction for installation

4.2.1 I would like to install camera on the desk

4.2.1.1 Precautions for installation

- ◆ Please install the machine on a flat desk
- ◆ Do not grab the camera head by hand when handling the device
- ◆ Do not rotate the camera head by hand. Improper rotation may result in breakdown of the camera

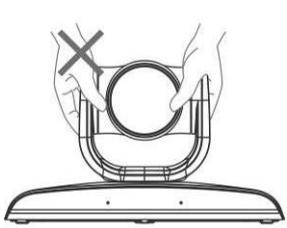

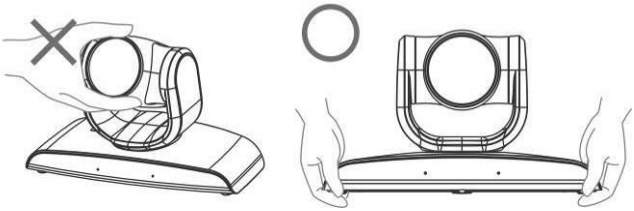

4.2.1.2 Installation steps

1. Install the camera on the wall with VC-AC03

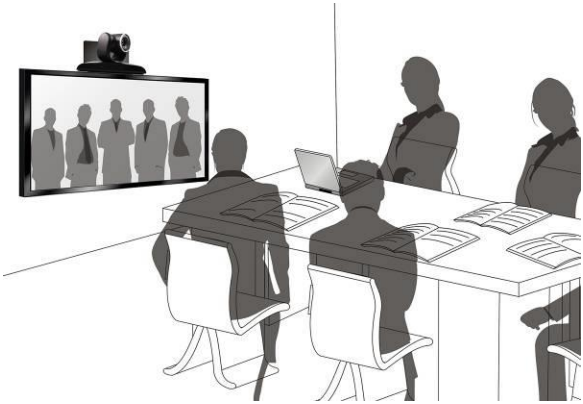

<Remark>For the installation of VC-AC03, please refer to
VC-AC03 Quick Installation Guide

4.2.1.3 Camera size

Length x Width x Height	:	267.69 x 123 x 155.60 mm
Weight	:	1.3 Kg

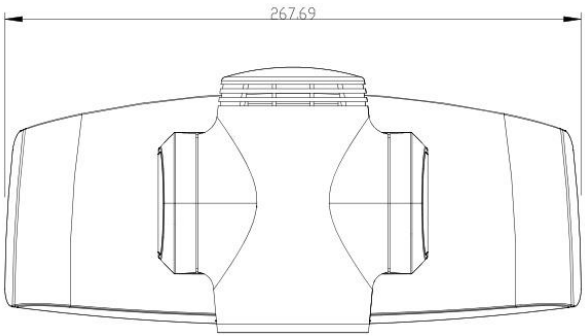

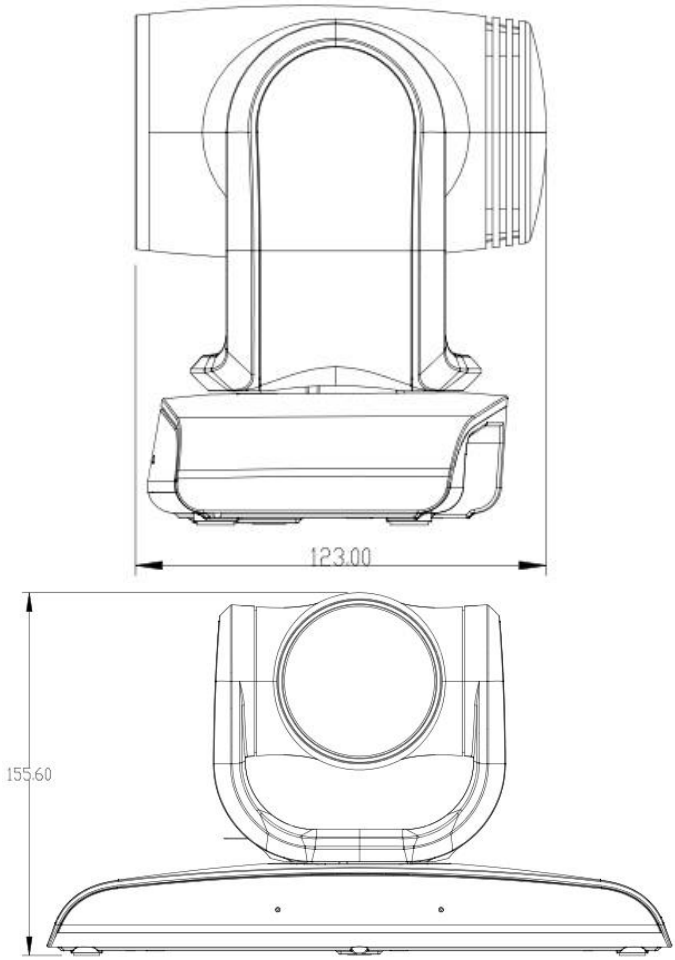

4.2.1.4 Precautions for installation

1. Before installation, please confirm the orientation of the machine relative to the object to be captured
2. It is recommended that the machine should be set at a distance of more than 1 meter away from the object to be captured. Please adjust for a best distance according to the magnification of the lens

4.3 Connecting the device

4.3.1 Image output

4.3.1.1 Connecting to a computer

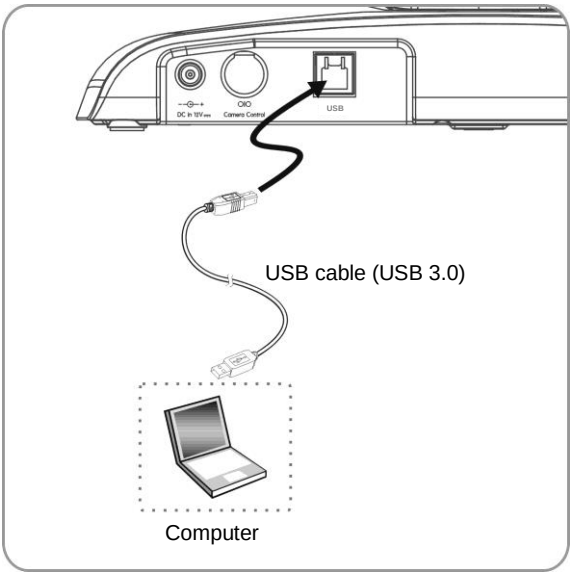

4.3.2 Use Compact Camera Controller to control the camera

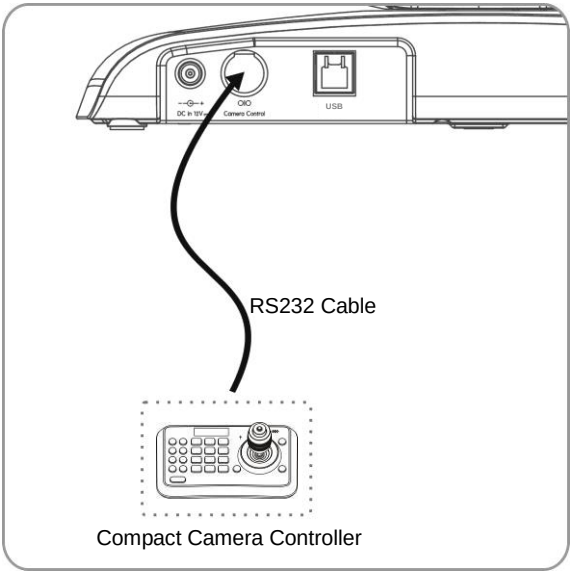

4.3.3 IR Out

IR Out includes IR Right and IR Left, use VISCA command to switch:

1. IR right and IR left ON
2. IR left OFF, IR right ON
3. IR left ON, IR right OFF
4. NA (no signal from IR receiver)

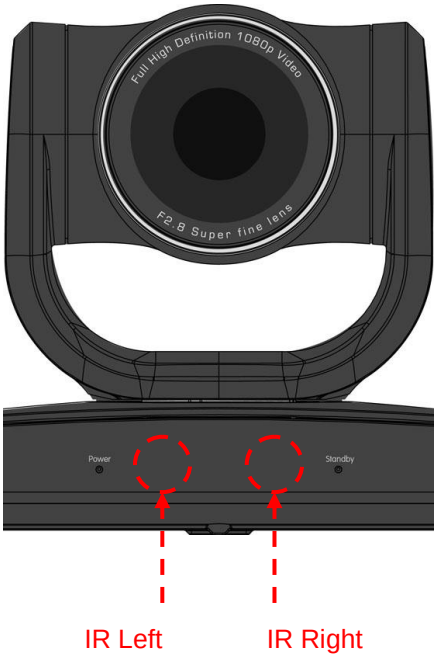

Chapter 5 Setting Menu Description

5.1 Functions of remote control

<Remark>The below functions are listed alphabetically.

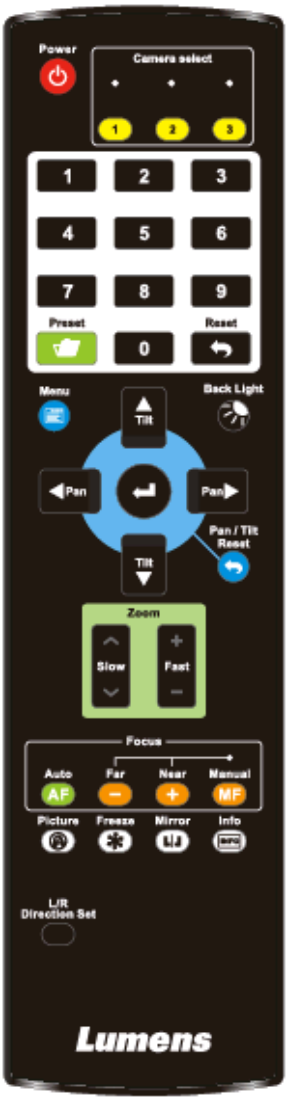

Item	Description
◄,►,▲,▼	Move the lens
Back Light	Turn on/off back light compensation
Camera select	NA
Focus-Manual / Far/Near	Turn on manual focus to adjust the focal length
Focus-Auto	Auto focus
Freeze	NA
Home-Enter	Go back to the main page / Execute
Info	NA
L/R Direction Set	L/R Direction / Normal
Menu	NA
Mirror	Rotate the image (OFF / Mirror / Flip / Rotate)
Pan/Tilt Reset	Clear the Pan / Tilt setting
Picture	NA
Power	Power Switch
Preset	Appoint an ID (0 ~ 9) to save the current position data
Reset	Appoint an ID (0 ~ 9) to delete the current position data
Zoom-Fast	Adjust image size
Zoom-Slow	Fine-tune image size

Chapter 6 Descriptions of Major Functions

6.1 I would like to save the current lens position data

1. Press **[Preset + ID]** on the **remote control** to save the current position data.

- **ID shall be a digit [0 ~ 9].**
- **Use VISCA command to store position data to [0 ~ 127]**

6.2 I would like to clear the saved position data

1. Press **[Reset + ID]** on the **remote control** to clear the given position data.

- **ID shall be a digit [0 ~ 9].**
- **Use VISCA command to clear position data stored in [0 ~ 127]**

6.3 I would like to turn on the back light compensation function

1. Press **[Back Light]** on the **remote control** to turn on or turn off the back light compensation

6.4 I would like to adjust the shooting angle of the lens

1. Press **[Tilt ▲]** or **[Tilt ▼]** on the **remote control** to adjust the angle upward or downward.
2. Press **[Pan ►]** or **[Pan ◄]** on the **remote control** to adjust the angle to right or left.
3. Press **[Pan - Tilt Reset]** on the **remote control** to reset the angle to the center point.

6.5 I would like to zoom in/out images

6.5.1 Adjust image size

1. Press **[Fast +]** on the **remote control** to zoom in images.
2. Press **[Fast -]** on the **remote control** to zoom out images.

6.5.2 Fine-tune image size

1. Press **[Slow +]** on the **remote control** to zoom in images.
2. Press **[Slow -]** on the **remote control** to zoom out images.

6.6 I would like to adjust the focal length

6.6.1 Auto tune

1. Press **[AF]** on the **remote control** to adjust automatically.

6.6.2 Manual focus

1. Press **[MF]** on the **remote control** to turn on the manual focus function.
2. Press **Focus - [+]** or **Focus - [-]** to adjust.

Chapter 7 DIP Switch Setting

<Note> Please turn off the machine before changing DIP switch setting.

7.1 DIP SWITCH

Setting	Function Descriptions
	For general use
	For ISO Mode
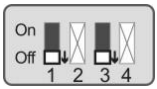	Power Frequency 60 Hz
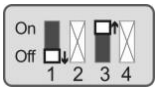	Power Frequency 50 Hz

Chapter 8 Troubleshooting

This chapter describes problems you may encounter while using VC-B20U. If you have questions, please refer to related chapters and follow all the suggested solutions. If the problem still occurred, please contact your distributor or the service center.

No.	Problems	Solutions
1.	**Boot without power signal**	1. Make sure you have plugged in the power cord.
2.	**There is no image output from VC-B20U**	1. Check the power. 2. Make sure the display supports the output resolution; in general, the resolution is 1080p60/1080i60/720p60. 3. Replace the cables and make sure they are not faulty.
3.	**VC-B20U cannot be operated by remote control**	1. Please confirm that VC-B20U has been connected to the computer, and launch video software. 2. Please prevent VC-B20U from direct sunshine. 3. Make sure the energy-saving bulb and the IR touch screen are as far as possible in order to avoid interference. 4. When several VC-B20U are connected in the same area, the operation of two remote controls at the same time may result in signal interference. It is recommended to use one remote control only.
4.	**Windows vista/ Windows 7 do not support YUV2 1920 x 1080 resolution @60 fps**	1. YUV2 1920 x 1080@60 fps is supported by USB 3.0 only. Please connect to USB 3.0 Host 2. If the YUV2 1920 x 1080@60 fps is connected to but not supported by the USB 3.0 Host, please adjust the resolution to 720P
5.	**When connected to the MAC computer, the video screen flicker or freeze**	If Mac OS X 10.10 or below is used, please switch the DIP Switch-DIP4 at the bottom of the camera to ON.
6.	**Automatically activate Standby mode**	5 seconds after the user turns off the video of the video conference software, VC-B20U will activate Standby mode automatically. The lens will be closed

		automatically (to comply with personal privacy requirement). When the user turns on the video once again, VC-B20U will automatically activate the Power on mode.

Appendix 1 Supported Resolutions

Format	Resolution	FPS	Support USB 3.0	Support USB 2.0	Remark
YUV2	1920x1080	60	YES	NA	
		50	YES	NA	
		30	YES	NA	
		25	YES	NA	
	1280x720	60	YES	NA	
		50	YES	NA	
		30	YES	NA	
		25	YES	NA	
	960x540	60	YES	NA	
		50	YES	NA	
		30	YES	NA	
		25	YES	NA	
	640x480	60	YES	NA	
		50	YES	NA	
		30	YES	YES	
		25	YES	YES	
	640x360	60	YES	NA	
		50	YES	NA	
		30	YES	YES	
		25	YES	YES	
MJPEG	1920x1080	60	YES	NA	
		50	YES	NA	
		30	YES	YES	
		25	YES	YES	
	1280x720	60	YES	NA	
		50	YES	NA	
		30	YES	YES	
		25	YES	YES	
	960x540	60	YES	NA	
		50	YES	NA	
		30	YES	YES	

		25	YES	YES	
	640x480	60	YES	YES	
		50	YES	YES	
		30	YES	YES	
		25	YES	YES	
	640x360	60	YES	YES	
		50	YES	YES	
		30	YES	YES	
		25	YES	YES	